HyperDeck Studio HD Plus



HyperDeck Studio HD Plus includes all the features of the Mini model, but is larger so it has more space for extra controls and extra connections. This model adds 6G-SDI so it can record and playback ProRes up to Ultra HD 30fps, and it includes an SDI loop out and HDR support. Plus the two 6G-SDI outputs allow fill and key playback up to 1080p60. There is also an HDMI input and a dedicated 3G-SDI monitoring output with overlays. Any button pushed on the front panel is sent to a dedicated RS-422 remote output and the DC power is now a broadcast style XLR connector. The front panel is also upgraded with better transport control buttons, a headphone socket and built in speaker.

$795

Connections

SDI Video Inputs
1

SDI Video Outputs
2

SDI Monitor Outputs
1

SDI Rates
270Mb, 1.5G, 3G, 6G.

HDMI 2.0 Video Inputs
1

HDMI 2.0 Video Outputs
1

Built in Speaker
Mono

Audio Output
1 x 6.35 mm headphone jack.

Screen
2.2 inch LCD.

Timecode Connections
1 x BNC In, 1 x BNC Out.

Reference Connections
1 x BNC In, 1 x BNC Out.
Tri-Sync or Black Burst.

SDI Audio Inputs
16 channels embedded audio.

SDI Audio Outputs
16 channels embedded audio.

HDMI Audio Inputs
8 channels embedded audio.

HDMI Audio Outputs
8 channels embedded audio.

Remote Control
1 x RS-422 In, 1 x RS-422 Out.

Recorder Configuration
Via user interface or Blackmagic HyperDeck Ethernet Protocol.

Ethernet
1Gb/s

Computer Interface
1 x USB Type-C 3.0 (up to 5Gb/s) for external drive recording, webcam out, software configuration and updates.

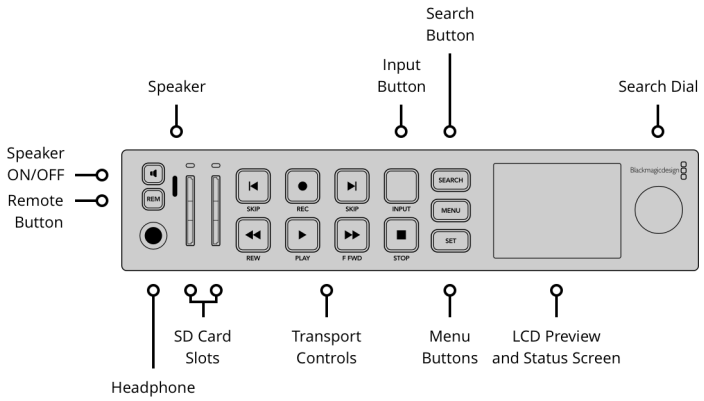

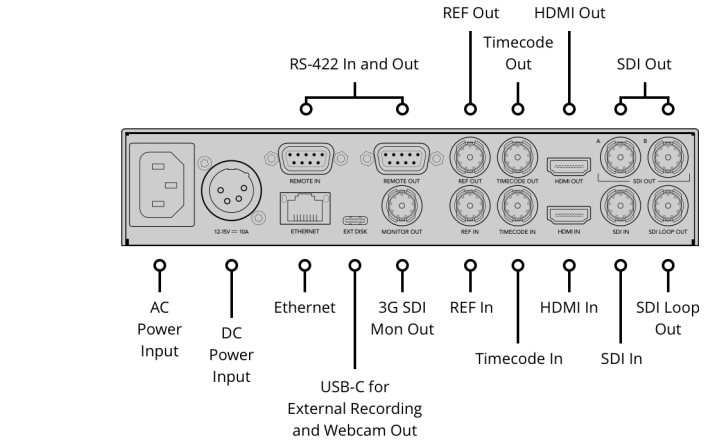

Standards

SD Video Standards
525i59.94 NTSC, 625i50 PAL

HD Video Standards
720p50, 720p59.94, 720p60
1080i50, 1080i59.94, 1080i60
1080p23.98, 1080p24, 1080p25,
1080p29.97, 1080p30, 1080p50,
1080p59.94, 1080p60
1080PsF23.98, 1080PsF24,
1080PsF25, 1080PsF29.97, 1080PsF30

2K DCI Video Standards
2Kp23.98 DCI, 2Kp24 DCI, 2Kp25 DCI,
2Kp29.97 DCI, 2Kp30 DCI

Ultra HD Video Standards
2160p23.98, 2160p24, 2160p25,
2160p29.97, 2160p30

4K DCI Video Standards
4Kp23.98 DCI, 4Kp24 DCI, 4Kp25 DCI,
4Kp29.97 DCI, 4Kp30 DCI

SDI Compliance
SMPTE 259M, SMPTE 292M,
SMPTE 296M, SMPTE 424M,
SMPTE 425M level A and B,
SMPTE 2081-1, SMPTE 2081-10,
SMPTE 2084 and SMPTE 2108-1.

SDI Metadata Support
HD RP188 and closed captioning
CEA-708. HDR Metadata supported
on SDI.

Supported HDMI Formats
525i59.94 NTSC, 625i50 PAL,
720p50, 720p59.94, 720p60,
1080i50, 1080i59.94, 1080i60,
1080p23.98, 1080p24, 1080p25,
1080p29.97, 1080p30, 1080p50,
1080p59.94, 1080p60,
2Kp23.98 DCI, 2Kp24 DCI, 2Kp25 DCI,
2Kp29.97 DCI, 2Kp30 DCI,
2160p23.98, 2160p24, 2160p25,
2160p29.97, 2160p30,
4Kp23.98 DCI, 4Kp24 DCI, 4Kp25 DCI,
4Kp29.97 DCI, 4Kp30 DCI

Audio Sampling
Television standard 24-bit, 48 kHz
sample rate.

Video Sampling
4:2:2 YUV

Color Precision
10-bit

Color Space
REC 601, REC 709, REC 2020. 33 point 3D LUTS can be applied to SDI monitor out.

HDR Support
Hybrid Log-Gamma, ST2084 300, ST2084 500, ST2084 800, ST2084 1000, ST2084 2000, ST2084 4000, ST2084

Multi Rate Support
Auto detection of SD, HD and 6G-SDI.

Copy Protection
HDMI input is unable to capture from copy protected HDMI sources. Always confirm copyright ownership before capture or distribution of content.

Media

Media
2 x SD card slots
1 x USB-C 3.0 expansion port for external recording of SD, HD, 2K DCI, Ultra HD and 4K DCI.
Please refer to either the Manual or the Information Note at www.blackmagicdesign.com/support for compatible media.

Media Type
UHS-I and UHS-II SD cards.

Media Format
Can format media to ExFAT (Windows/Mac) or HFS+ (Mac) file systems.

Supported Codecs

ProRes HQ QuickTime, ProRes 422 QuickTime, ProRes LT QuickTime, ProRes Proxy QuickTime for all formats up to 2160p30. Playback only of ProRes 4444 QuickTime up to 1080p60 with auto routing of fill and key over SDI A and B outputs. DNxHD 220x, DNxHD 220x MXF, DNxHD 145, DNxHD 145 MXF, DNxHD 45, DNxHD 45 MXF for 720p and 1080p HD formats up to 60fps. DNxHR HQX, DNxHR HQX MXF, DNxHR SQ, DNxHR SQ MXF, DNxHR LB, DNxHR LB MXF for 2K DCI and 2160p formats up to 30fps. H.264 SDI 4:2:2 10-bit, H.264 High 4:2:0 8-bit, H.264 Medium 4:2:0 8-bit, H.264 Low 4:2:0 8-bit for all formats up to 1080p60.

Control

Built in Control Panel
13 buttons for transport and device control with search dial and 2.2 inch color display.

External Control
RS-422 deck control, SDI start/stop, timecode run. Includes Blackmagic HyperDeck Ethernet Protocol.
Supports remote FTP file upload.

Software

Software Included
Blackmagic OS
Blackmagic HyperDeck Setup
Internal Software Upgrade
Loaded at system start, or via Blackmagic HyperDeck Setup using USB port.

Operating Systems



Mac 15.0 Sequoia,
Mac 26.0 Tahoe or later.



Windows 11

Displays

Built in 2.2 inch LCD for video, audio and timecode monitoring and menu settings.
LED indicator lights above the SD media slots.

Power Requirements

Power Supply
1 x Internal 100 - 240V AC 50/60Hz.
1 x 4 pin XLR 12V DC In for external power supply or battery use.

Power Usage
100 W max.

Accessories

Optional Accessories
HyperDeck Extreme Control
Teranex Mini Rack Shelf

Physical Installation

Half rack unit width, 1 rack unit height.

Physical Specifications



Environmental Specifications

Operating Temperature
0° to 40° C (32°to 104° F)

Storage Temperature
-20° to 60° C (-4° to 140° F)

Relative Humidity
0% to 90% non-condensing

What's Included

HyperDeck Studio HD Plus

Warranty

1 Year Limited Manufacturer’s Warranty.

All items on this website are copyright Blackmagic Design Pty. Ltd. 2026, all rights reserved. All trademarks are property of their respective owners. MSRP includes duties, but excludes sales tax and shipping costs. This website uses remarketing services to advertise on third party websites to previous visitors to our site. You can opt out at any time by changing cookie settings. Privacy Policy

Blackmagic Design Authorized Reseller